A= area
J= moment of inertia
Ws= superior modulus of resistance
Wi= inferior modulus of resistance
Dbi=barycenter distance from bottom

Beam Type 3

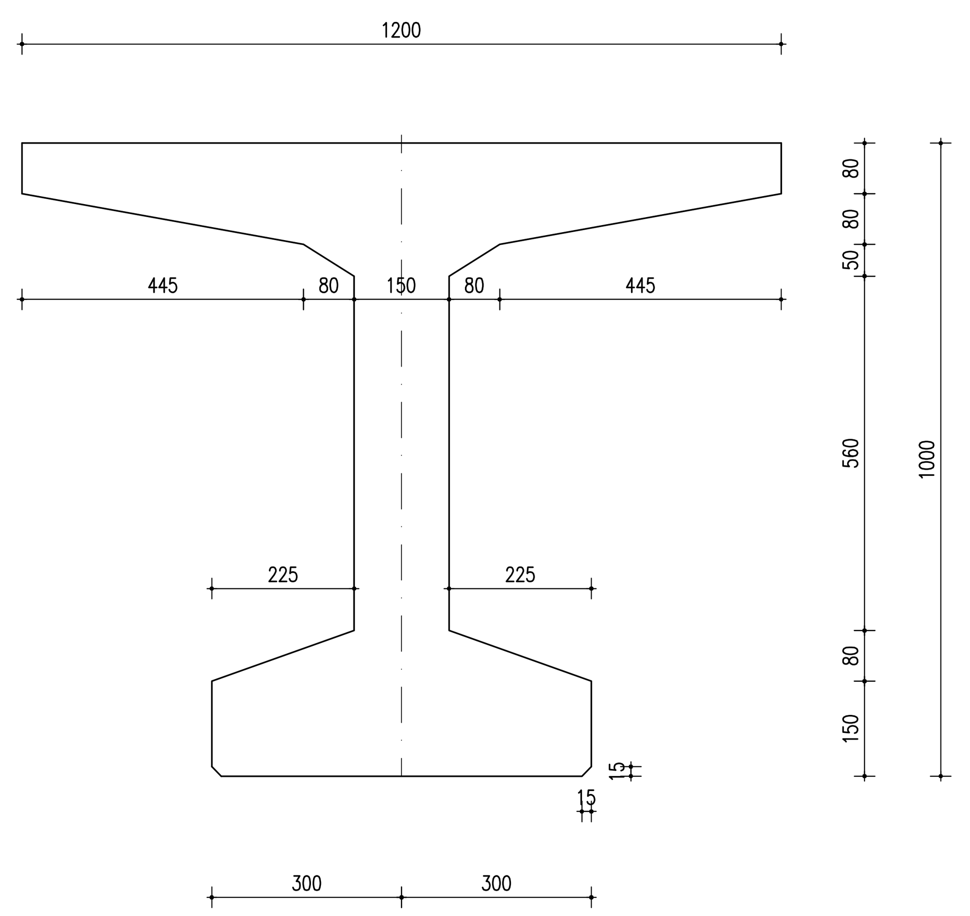

A= 3717 cmq
J= 5066293 cm^4
Ws= 116643 cm^3
Wi= 89564 cm^3
Dbi= 56.57 cm

A= area
J= moment of inertia
Ws= superior modulus of resistance
Wi= inferior modulus of resistance
Dbi=barycenter distance from bottom

Beam Type 7

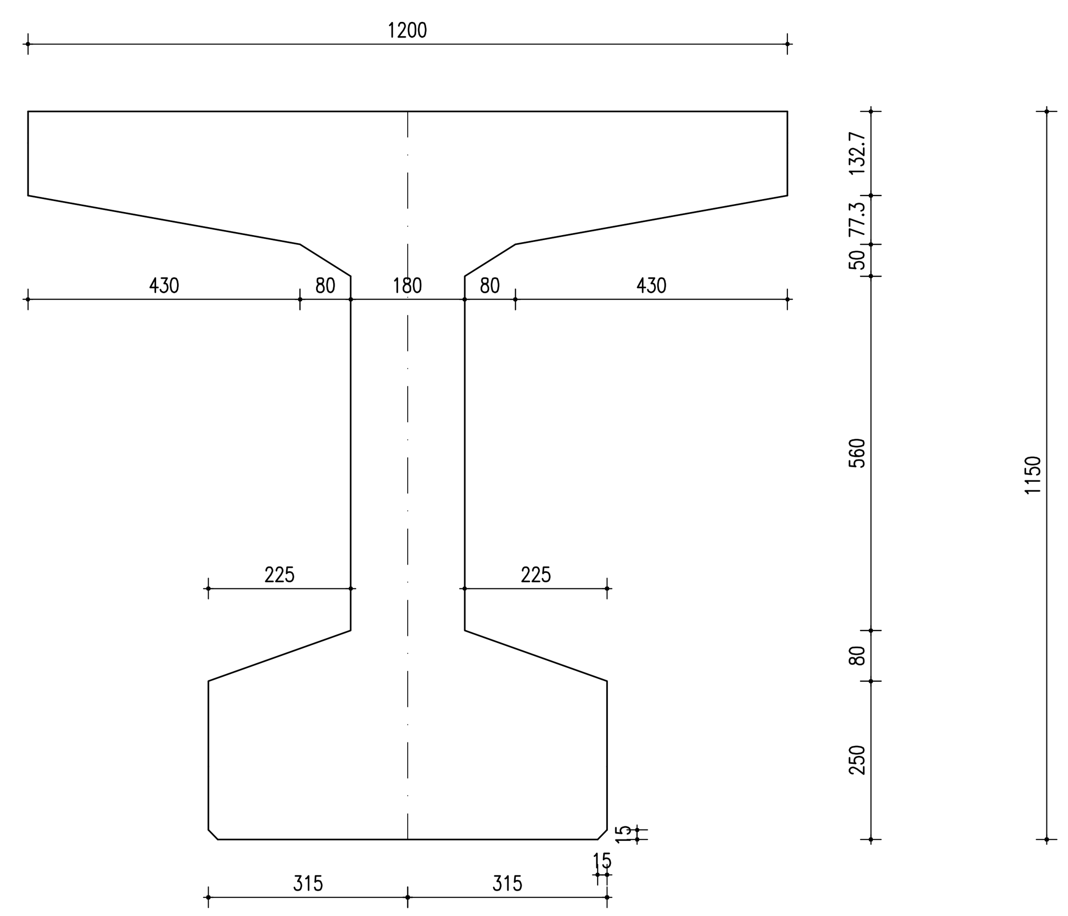

A= 5222 cmq
J= 8910681 cm^4
Ws= 174239 cm^3
Wi= 139535 cm^3
Dbi= 63.86 cm

Ws= superior modulus of resistance
Wi= inferior modulus of resistance
Dbi=barycenter distance from bottom
A= area
J= moment of inertia

Beam Type 4

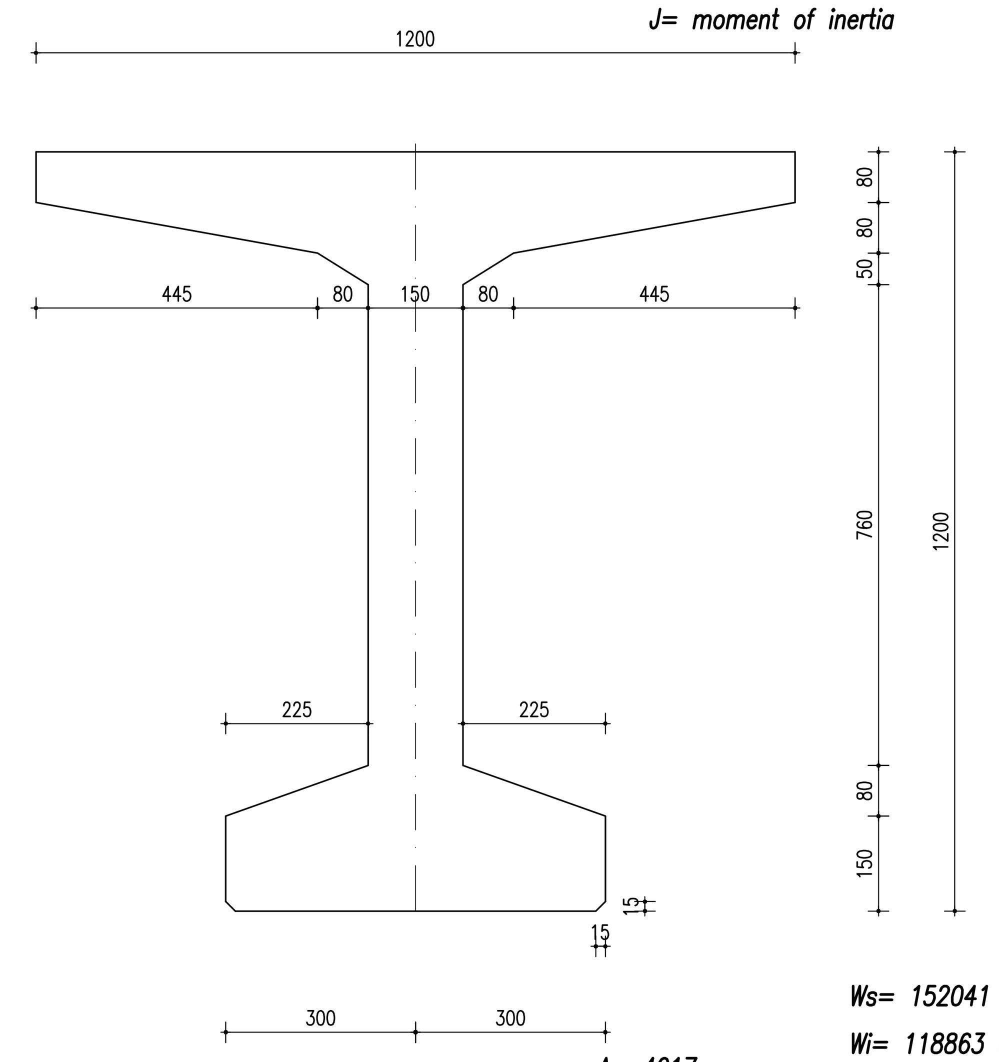

A= 4017 cmq
J= 8005229 cm^4
Ws= 152041 cm^3
Wi= 118863 cm^3
Dbi= 67.34 cm

A= area
J= moment of inertia
Ws= superior modulus of resistance
Wi= inferior modulus of resistance
Dbi=barycenter distance from bottom

Beam Type 8

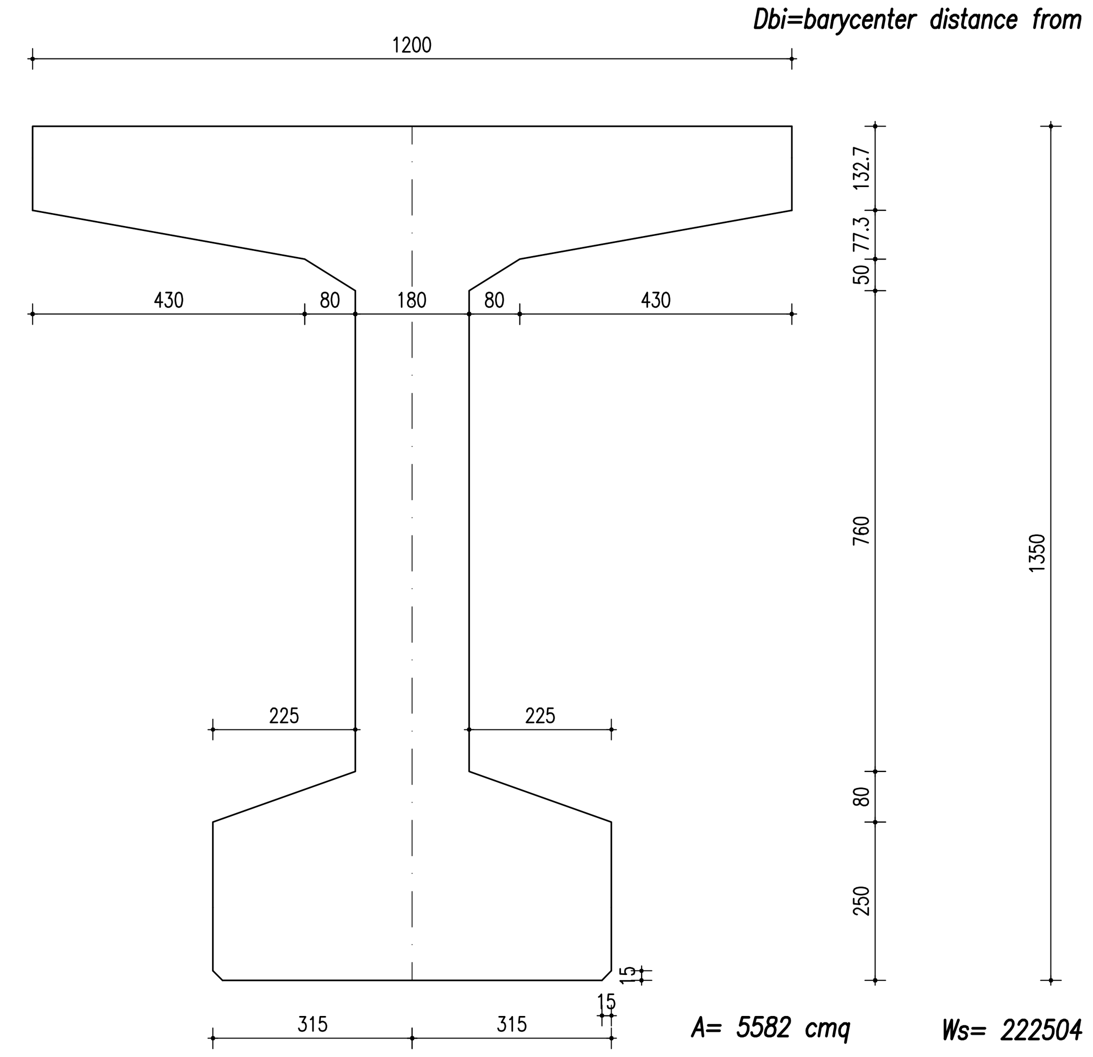

A= 5582 cmq
J= 13477269 cm^4
Ws= 222504 cm^3
Wi= 181075 cm^3
Dbi= 74.43 cm

A= area
J= moment of inertia
Ws= superior modulus of resistance
Wi= inferior modulus of resistance
Dbi=barycenter distance from bottom

Beam Type 2

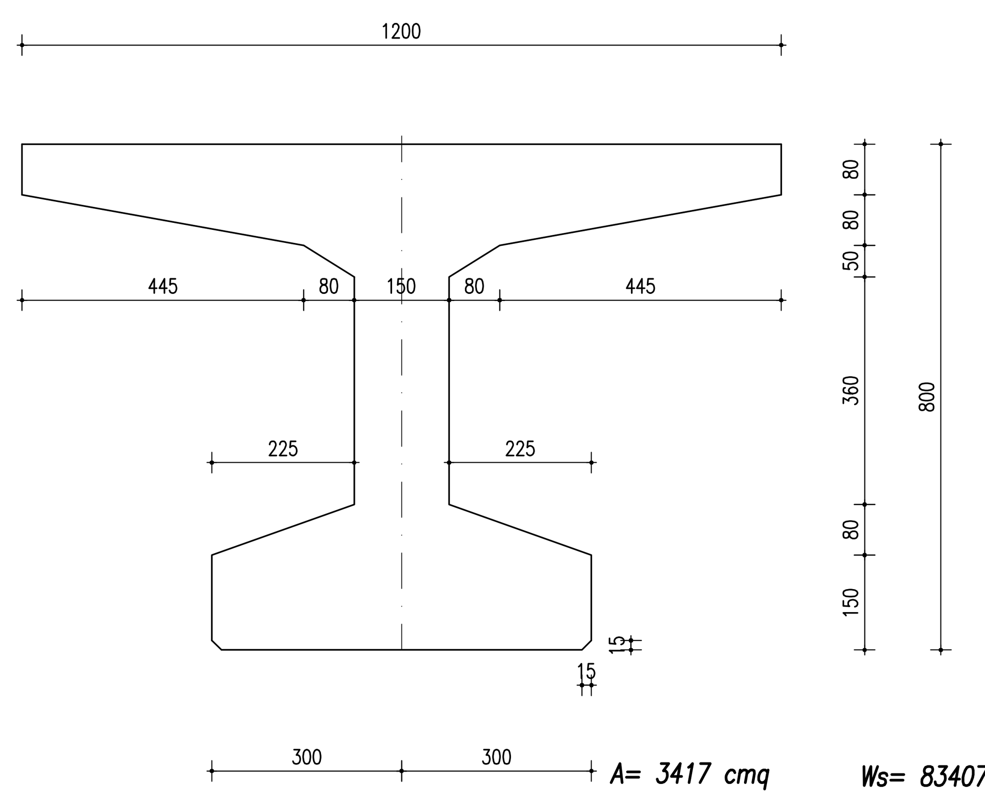

A= 3417 cmq
J= 2865358 cm^4
Ws= 83407 cm^3
Wi= 62773 cm^3
Dbi= 45.65 cm

A= area
J= moment of inertia
Ws= superior modulus of resistance
Wi= inferior modulus of resistance
Dbi=barycenter distance from bottom

Beam Type 6

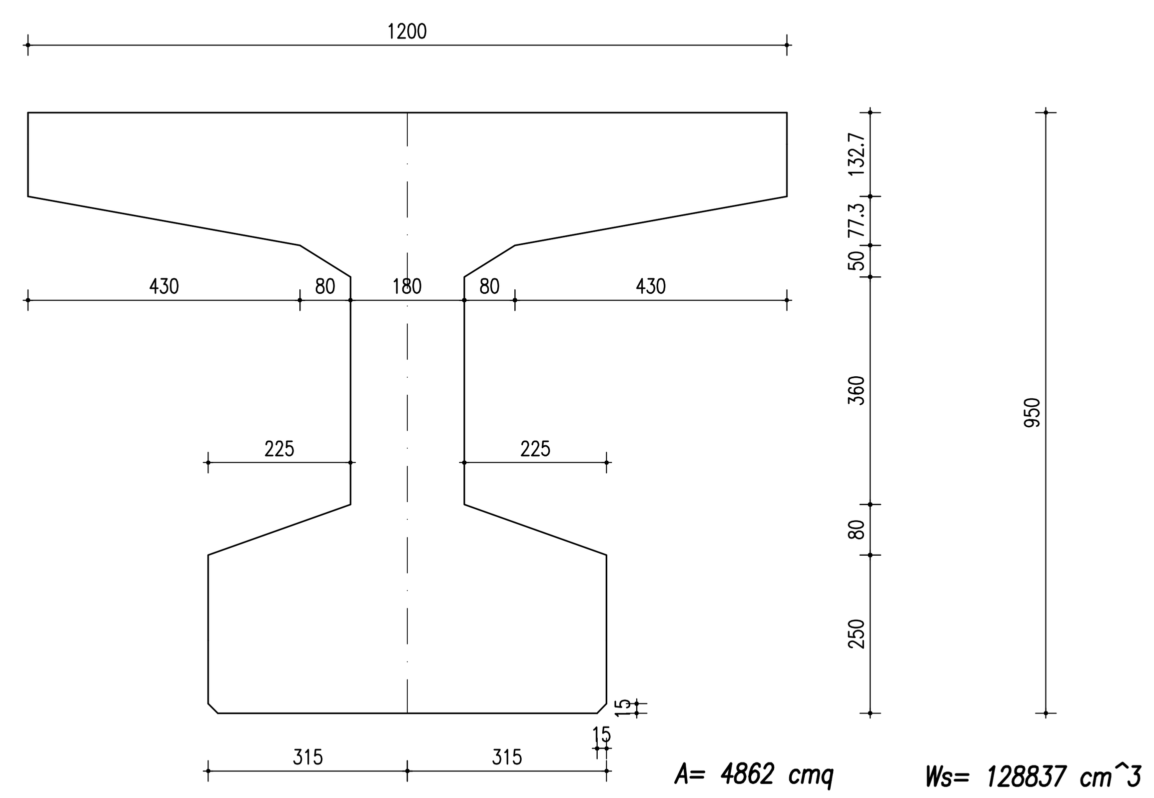

A= 4862 cmq
J= 5384677 cm^4
Ws= 128837 cm^3
Wi= 101204 cm^3
Dbi= 53.21 cm

A= area
J= moment of inertia
Ws= superior modulus of resistance
Wi= inferior modulus of resistance
Dbi=barycenter distance from bottom

Beam Type 1

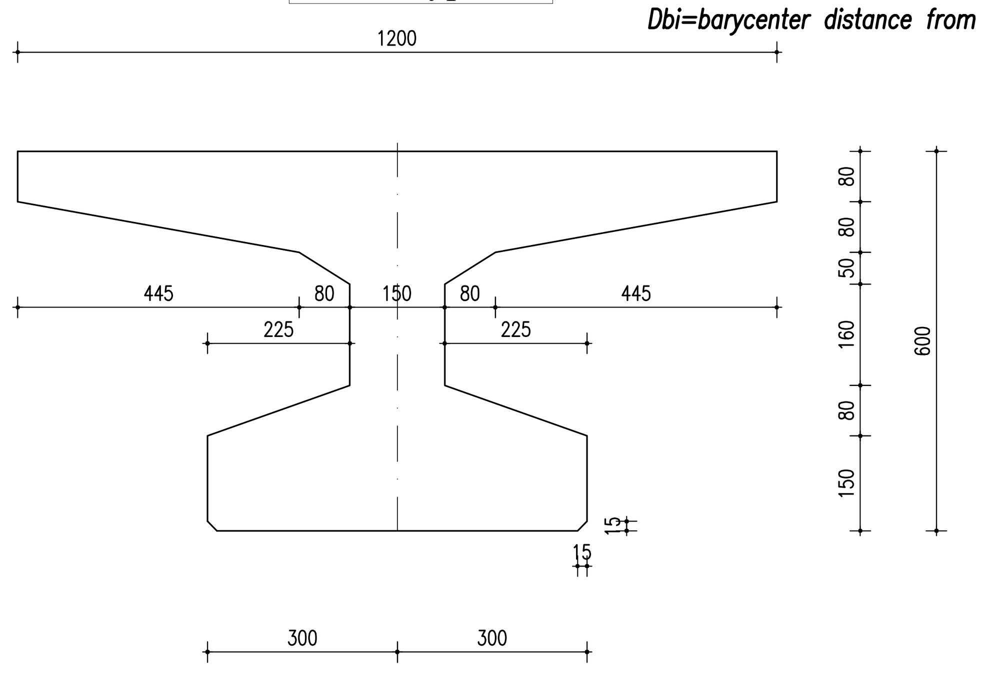

A= 3117 cmq
J= 1340879 cm^4
Ws= 52685 cm^3
Wi= 38810 cm^3
Dbi= 34.55 cm

A= area
J= moment of inertia
Ws= superior modulus of resistance
Wi= inferior modulus of resistance
Dbi=barycenter distance from bottom

Beam Type 5

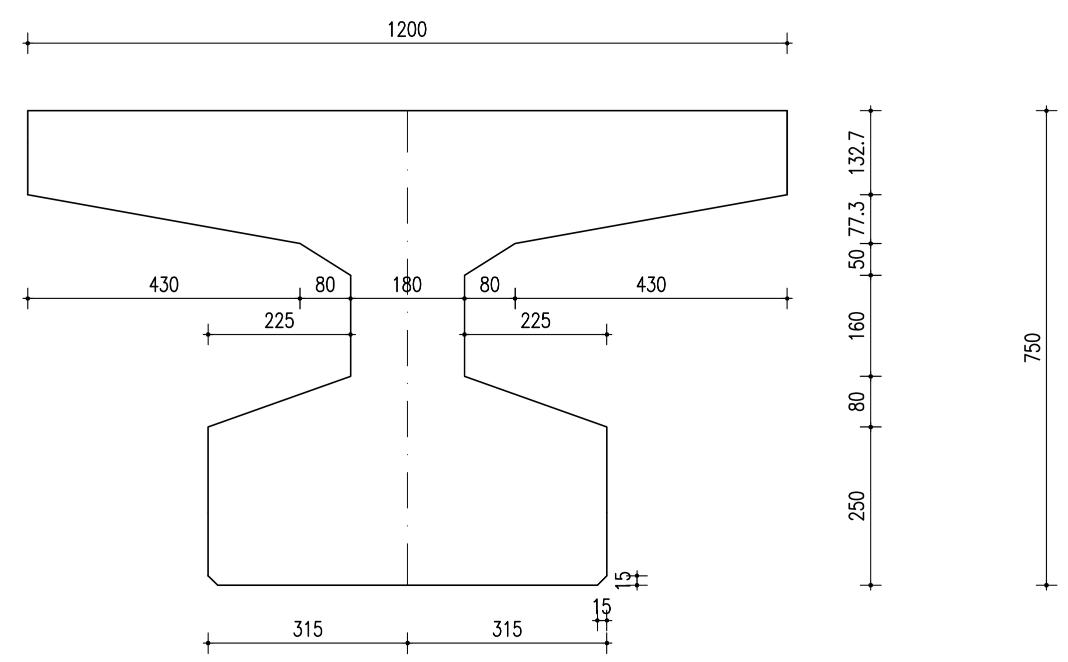

A= 4502 cmq
J= 2826323 cm^4
Ws= 86823 cm^3
Wi= 66584 cm^3
Dbi= 42.45 cm

PRETENSION

Beam Type 8

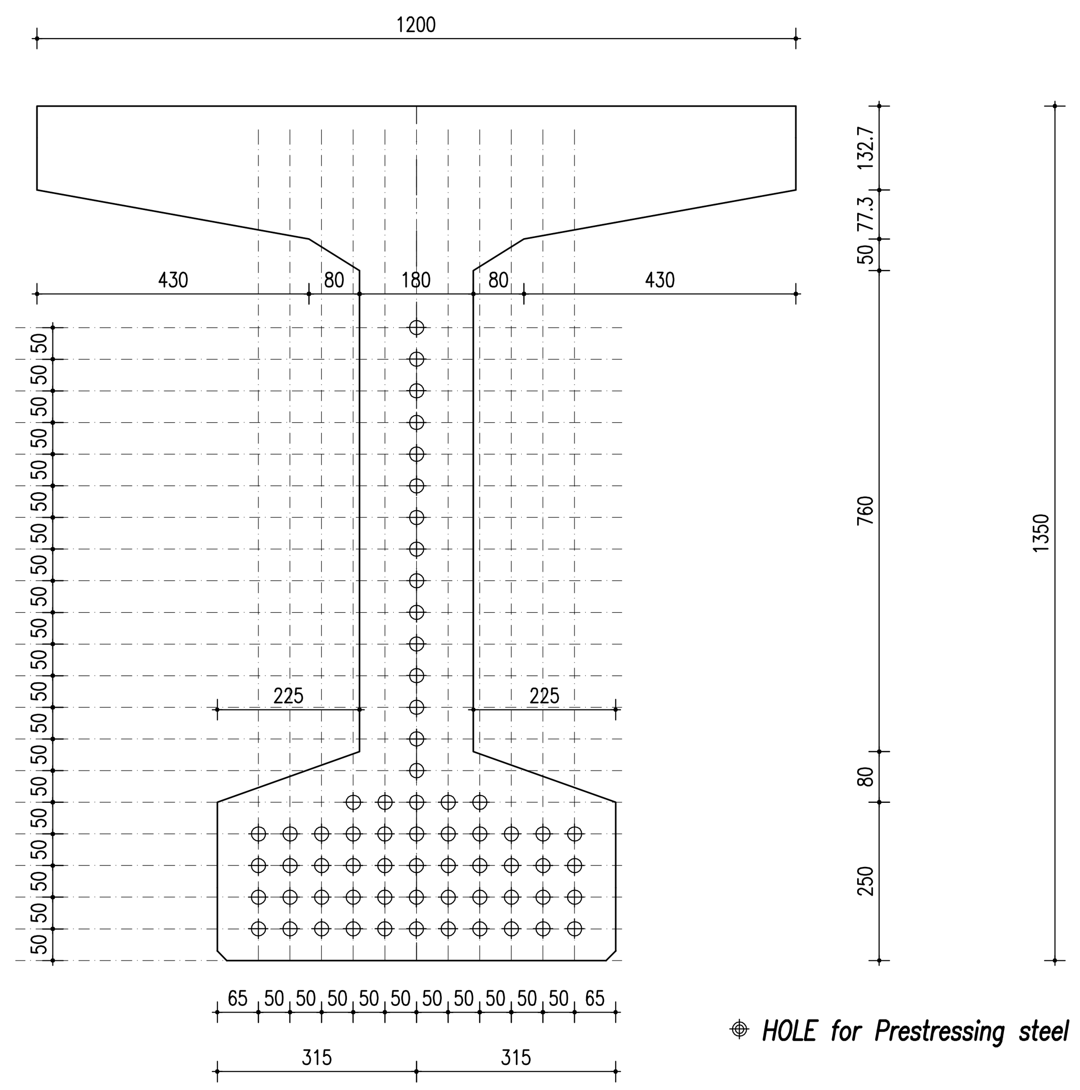

HOLE for Prestressing steel 0.6" diam.

Beam Type 8

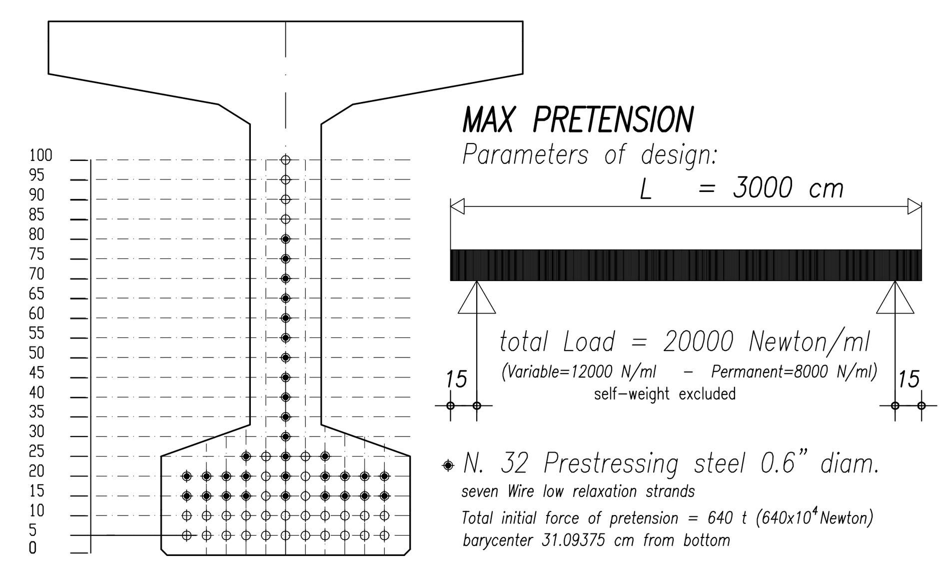

MAX PRETENSION
Parameters of design:
L = 3000 cm
total Load = 20000 Newton/ml
(Variable=12000 N/ml – Permanent=8000 N/ml)
self-weight excluded

N. 32 Prestressing steel 0.6" diam.
seven Wire low relaxation strands
Total initial force of pretension = 640 t (640x10[4] Newton)
barycenter 31.09375 cm from bottom

Beam Type 8

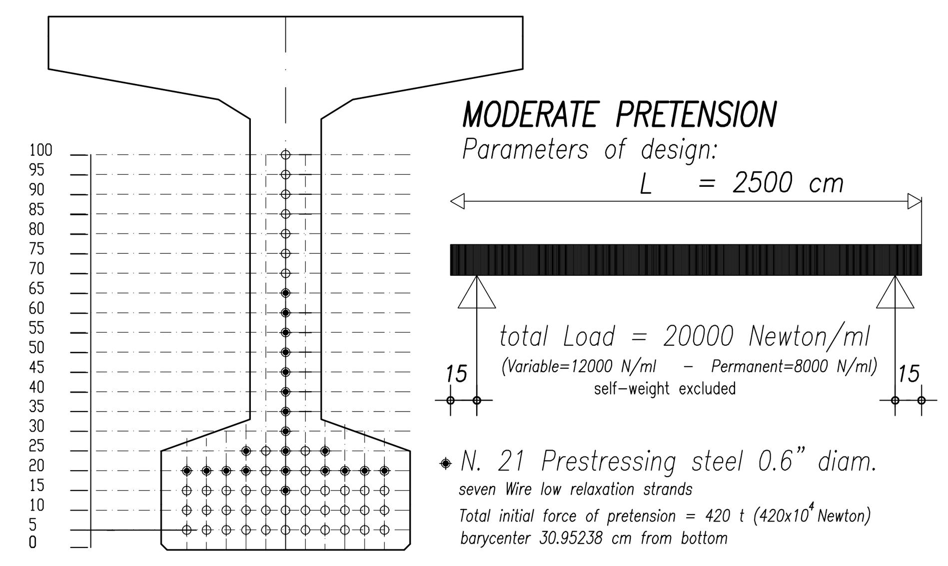

MODERATE PRETENSION
Parameters of design:
L = 2500 cm
total Load = 20000 Newton/ml
(Variable=12000 N/ml – Permanent=8000 N/ml)
self-weight excluded

N. 21 Prestressing steel 0.6" diam.
seven Wire low relaxation strands
Total initial force of pretension = 420 t (420x10[4] Newton)
barycenter 30.95238 cm from bottom

MATERIALS DATA		
CONCRETE	fckj ≥ 330 daN/cmq	fck ≥ 450 daN/cmq
MIN COVER	C= 3.5 cm	Exposure class= XD3
PRESTRESSING STEEL	fptk ≥ 18600 daN/cmq	fp(1)k ≥ 16700 daN/cmq
Tension in the jack		δ ap.= 14030 daN/cmq
CONVENTIONAL REINFORCING BARS : STEEL TYPE B450C		
fyk ≥ 4500 daN/cmq	A 5 ≥ 12%	ftk ≥ 5400 daN/cmq
PRODUCTION DEVIATIONS		
BEAM:	LENGTH:+1/- 2.5 cm L<20 m	:+1/-L/800 cm L>20 m
SECTION:	B=+/- 1.0 cm H=+/-1.0 cm	

ENGISOFT
DESENZANO DEL GARDA / BS (ITALY)
Web: www.engisoft.org
E-Mail: studio@engisoft.org

STANDARD PRESTRESSED CONCRETE GIRDERS

Date: 11-06-08
Revisions: 17-06-08

Object: Sections
Holes Max Pretension

N° JOB 88
PHASE Structural design

Drawing N:1

According to the law the property of the present design is reserved: Prohibition of reproduction and communication without preventive written authorization.

Software INTELLICAD XP

PEN	RED(1)	JELL(2)	GREEN(3)	CIANO(4)	BLU(5)	MAGENTA(6)	WHITE(7)	8	9	10	11
WIDTH	0.15	0.58	0.42	0.15	0.06	0.10	0.27	0.20	0.001	0.20	0.003